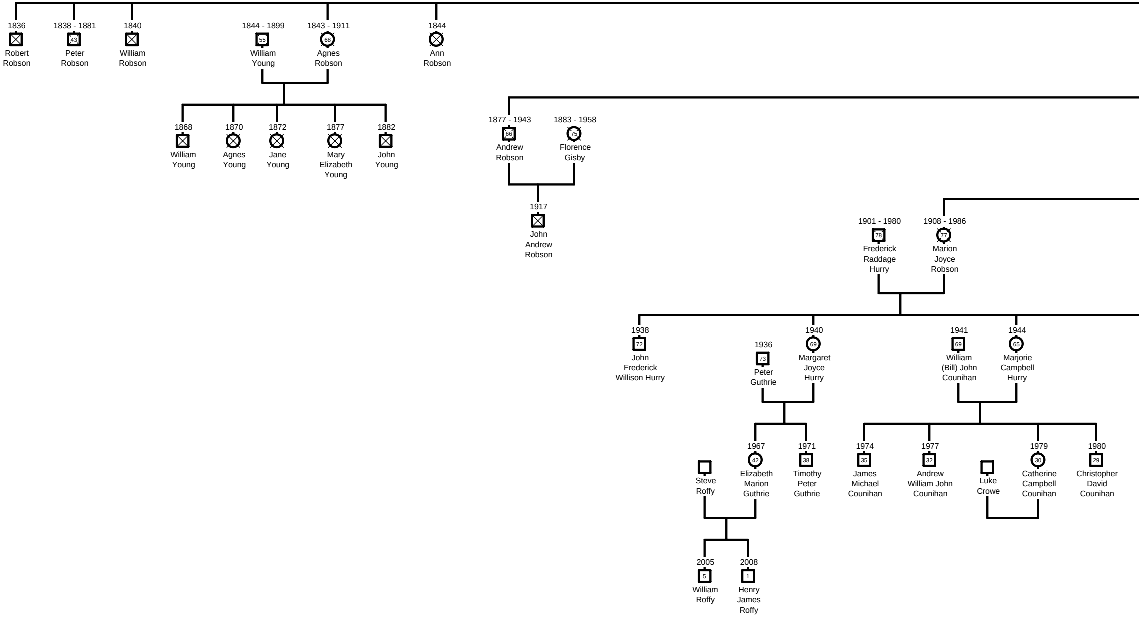
1836
Robert Robson
1838 - 1881
43
Peter Robson
1840
William Robson
1844 - 1899
55
William Young
1843 - 1911
68
Agnes Robson
1844
Ann Robson
1868
William Young
1870
Agnes Young
1872
Jane Young
1877
Mary Elizabeth Young
1882
John Young
1877 - 1943
66
Andrew Robson
1883 - 1958
75
Florence Gisby
1917
John Andrew Robson
1901 - 1980
78
Frederick Raddage Hurry
1908 - 1986
77
Marion Joyce Robson
1938
72
John Frederick Willison Hurry
1936
73
Peter Guthrie
1940
69
Margaret Joyce Hurry
1941
69
William (Bill) John Counihan
1944
65
Marjorie Campbell Hurry
Steve Roffy
1967
42
Elizabeth Marion Guthrie
1971
38
Timothy Peter Guthrie
1974
35
James Michael Counihan
1977
32
Andrew William John Counihan
Luke Crowe
1979
30
Catherine Campbell Counihan
1980
29
Christopher David Counihan
2005
5
William Roffy
2008
1
Henry James Roffy

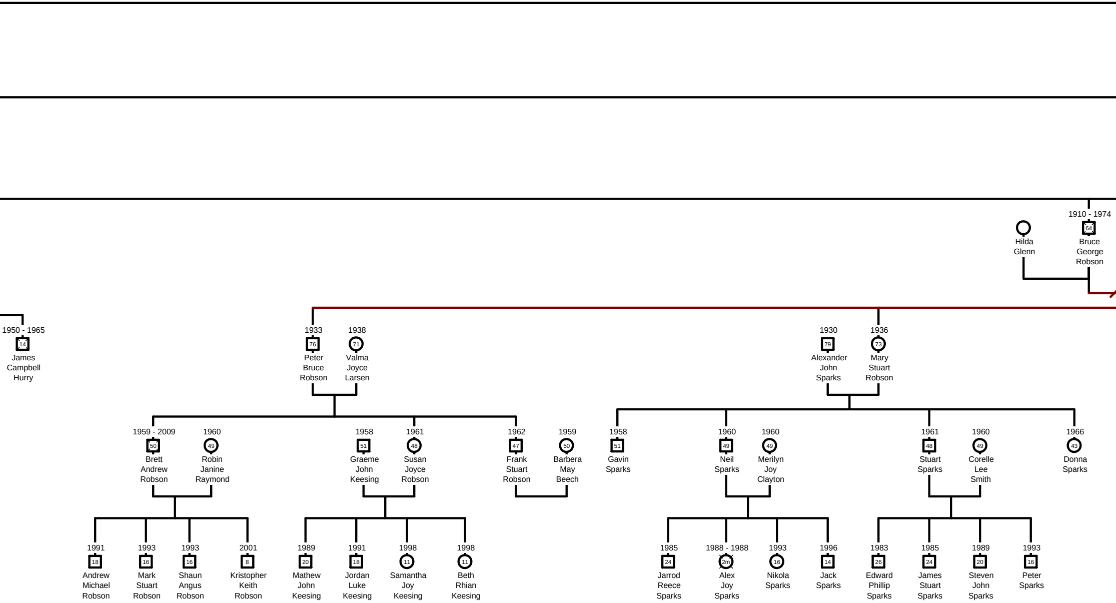
1910 - 1974
64
Hilda Glenn
Bruce George Robson
1950 - 1965
14
James Campbell Hurry
1933
76
Peter Bruce Robson
1938
71
Valma Joyce Larsen
1930
79
Alexander John Sparks
1936
73
Mary Stuart Robson
1959 - 2009
50
Brett Andrew Robson
1960
49
Robin Janine Raymond
1958
51
Graeme John Keesing
1961
48
Susan Joyce Robson
1962
47
Frank Stuart Robson
1959
50
Barbera May Beech
1958
51
Gavin Sparks
1960
49
Neil Sparks
1960
49
Merilyn Joy Clayton
1961
48
Stuart Sparks
1960
49
Corelle Lee Smith
1966
43
Donna Sparks
1991
18
Andrew Michael Robson
1993
16
Mark Stuart Robson
1993
16
Shaun Angus Robson
2001
8
Kristopher Keith Robson
1989
20
Mathew John Keesing
1991
18
Jordan Luke Keesing
1998
11
Samantha Joy Keesing
1998
11
Beth Rhian Keesing
1985
24
Jarrod Reece Sparks
1988 - 1988
2m
Alex Joy Sparks
1993
16
Nikola Sparks
1996
14
Jack Sparks
1983
26
Edward Phillip Sparks
1985
24
James Stuart Sparks
1989
20
Steven John Sparks
1993
16
Peter Sparks

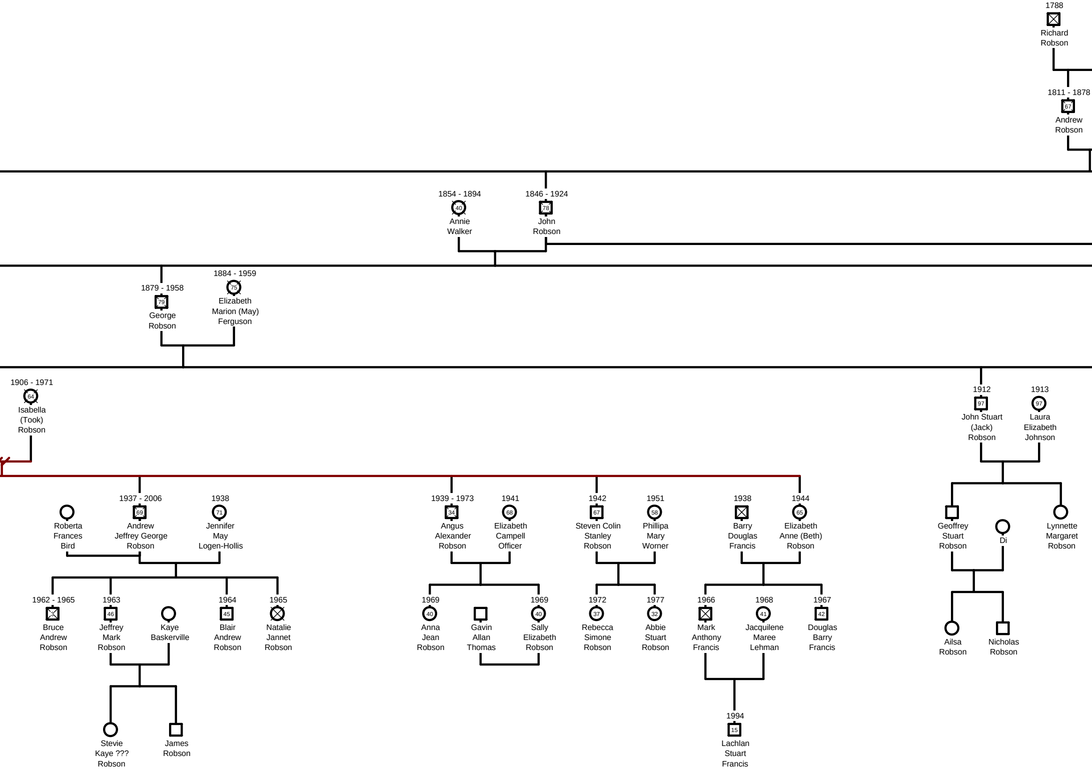
1788
Richard Robson
1811 - 1878
67
Andrew Robson
1854 - 1894
40
Annie Walker
1846 - 1924
78
John Robson
1879 - 1958
79
George Robson
1884 - 1959
75
Elizabeth Marion (May) Ferguson
1906 - 1971
64
Isabella (Took) Robson
1912
97
John Stuart (Jack) Robson
1913
97
Laura Elizabeth Johnson
Roberta Frances Bird
1937 - 2006
69
Andrew Jeffrey George Robson
1938
71
Jennifer May Logen-Hollis
1939 - 1973
34
Angus Alexander Robson
1941
68
Elizabeth Campell Officer
1942
67
Steven Colin Stanley Robson
1951
58
Phillipa Mary Worner
1938
Barry Douglas Francis
1944
65
Elizabeth Anne (Beth) Robson
Geoffrey Stuart Robson
Di
Lynnette Margaret Robson
1962 - 1965
3
Bruce Andrew Robson
1963
46
Jeffrey Mark Robson
Kaye Baskerville
1964
45
Blair Andrew Robson
1965
Natalie Jannet Robson
1969
40
Anna Jean Robson
Gavin Allan Thomas
1969
40
Sally Elizabeth Robson
1972
37
Rebecca Simone Robson
1977
32
Abbie Stuart Robson
1966
Mark Anthony Francis
1968
41
Jacquilene Maree Lehman
1967
42
Douglas Barry Francis
Ailsa Robson
Nicholas Robson
Stevie Kaye ??? Robson
James Robson
1994
15
Lachlan Stuart Francis

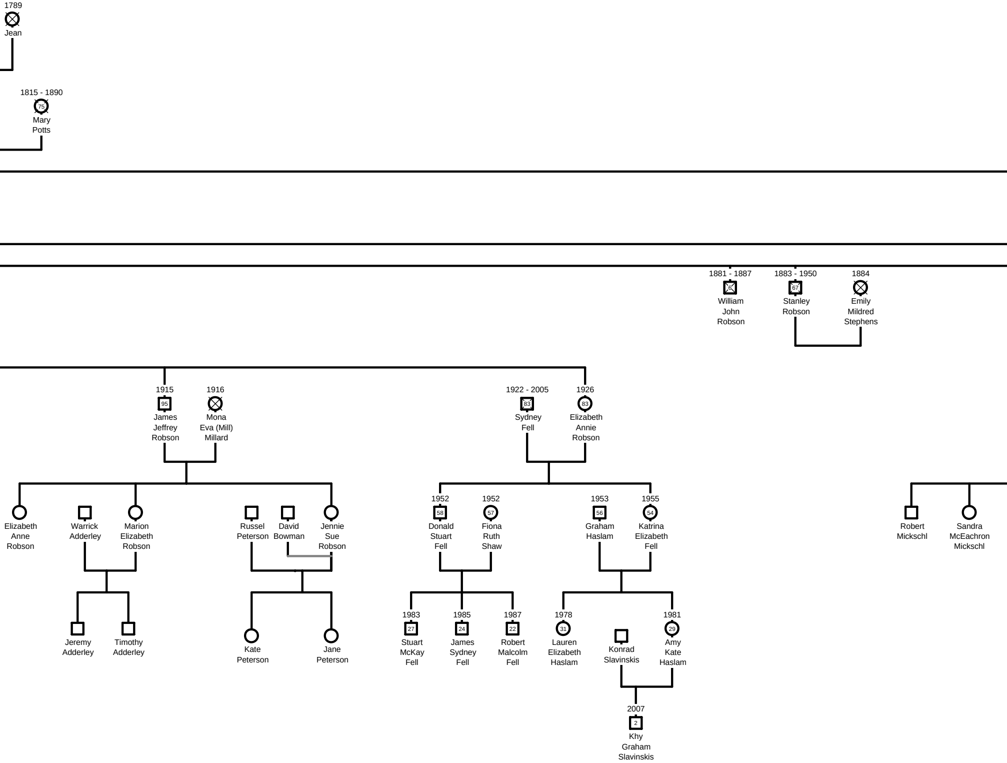
1789
Jean
1815 - 1890
75
Mary Potts
1881 - 1887
6
William John Robson
1883 - 1950
67
Stanley Robson
1884
Emily Mildred Stephens
1915
95
James Jeffrey Robson
1916
Mona Eva (Mill) Millard
1922 - 2005
83
Sydney Fell
1926
83
Elizabeth Annie Robson
Elizabeth Anne Robson
Warrick Adderley
Marion Elizabeth Robson
Russel Peterson
David Bowman
Jennie Sue Robson
1952
58
Donald Stuart Fell
1952
57
Fiona Ruth Shaw
1953
56
Graham Haslam
1955
54
Katrina Elizabeth Fell
Robert Mickschl
Sandra McEachron Mickschl
Jeremy Adderley
Timothy Adderley
Kate Peterson
Jane Peterson
1983
27
Stuart McKay Fell
1985
24
James Sydney Fell
1987
22
Robert Malcolm Fell
1978
31
Lauren Elizabeth Haslam
Konrad Slavinskis
1981
29
Amy Kate Haslam
2007
2
Khy Graham Slavinskis

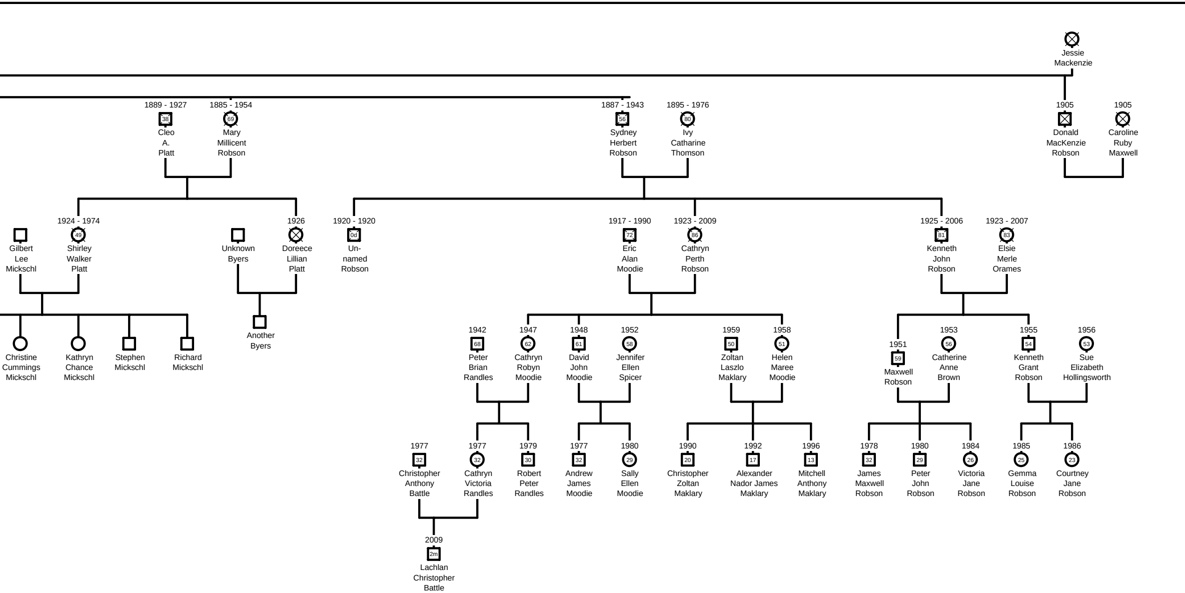
Jessie Mackenzie
1889 - 1927
38
Cleo A. Platt
1885 - 1954
69
Mary Millicent Robson
1887 - 1943
56
Sydney Herbert Robson
1895 - 1976
80
Ivy Catharine Thomson
1905
Donald MacKenzie Robson
1905
Caroline Ruby Maxwell
Gilbert Lee Mickschl
1924 - 1974
49
Shirley Walker Platt
Unknown Byers
1926
Doreece Lillian Platt
1920 - 1920
0d
Un-named Robson
1917 - 1990
72
Eric Alan Moodie
1923 - 2009
86
Cathryn Perth Robson
1925 - 2006
81
Kenneth John Robson
1923 - 2007
83
Elsie Merle Orames
Christine Cummings Mickschl
Kathryn Chance Mickschl
Stephen Mickschl
Richard Mickschl
Another Byers
1942
68
Peter Brian Randles
1947
62
Cathryn Robyn Moodie
1948
61
David John Moodie
1952
58
Jennifer Ellen Spicer
1959
50
Zoltan Laszlo Maklary
1958
51
Helen Maree Moodie
1951
59
Maxwell Robson
1953
56
Catherine Anne Brown
1955
54
Kenneth Grant Robson
1956
53
Sue Elizabeth Hollingsworth
1977
32
Christopher Anthony Battle
1977
32
Cathryn Victoria Randles
1979
30
Robert Peter Randles
1977
32
Andrew James Moodie
1980
29
Sally Ellen Moodie
1990
20
Christopher Zoltan Maklary
1992
17
Alexander Nador James Maklary
1996
13
Mitchell Anthony Maklary
1978
32
James Maxwell Robson
1980
29
Peter John Robson
1984
26
Victoria Jane Robson
1985
25
Gemma Louise Robson
1986
23
Courtney Jane Robson
2009
2m
Lachlan Christopher Battle

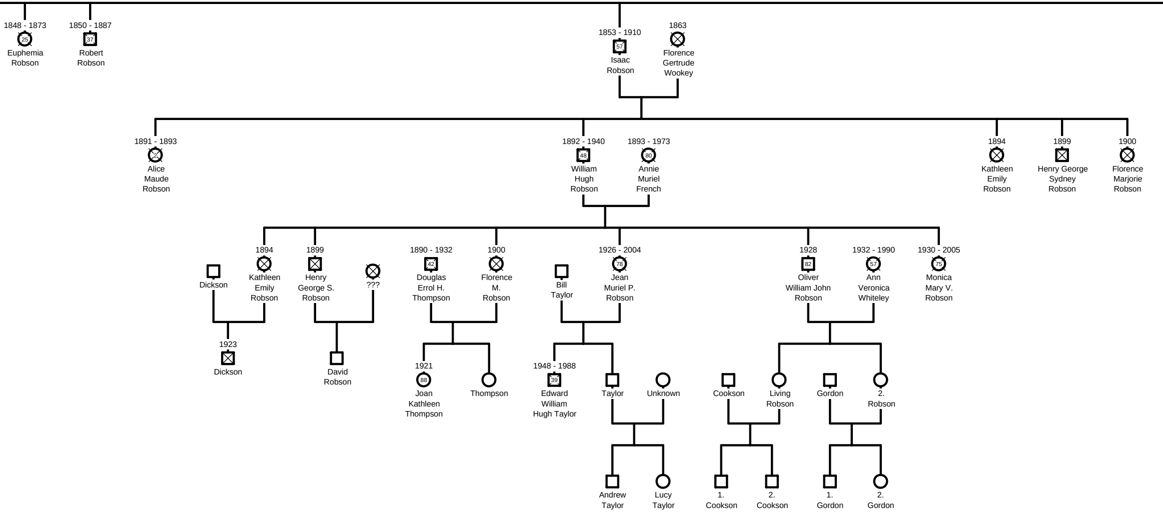
1848 - 1873
25
Euphemia Robson
1850 - 1887
37
Robert Robson
1853 - 1910
57
Isaac Robson
1863
Florence Gertrude Wookey
1891 - 1893
2
Alice Maude Robson
1892 - 1940
48
William Hugh Robson
1893 - 1973
80
Annie Muriel French
1894
Kathleen Emily Robson
1899
Henry George Sydney Robson
1900
Florence Marjorie Robson
Dickson
1894
Kathleen Emily Robson
1899
Henry George S. Robson
???
1890 - 1932
42
Douglas Errol H. Thompson
1900
Florence M. Robson
Bill Taylor
1926 - 2004
78
Jean Muriel P. Robson
1928
82
Oliver William John Robson
1932 - 1990
57
Ann Veronica Whiteley
1930 - 2005
75
Monica Mary V. Robson
1923
Dickson
David Robson
1921
88
Joan Kathleen Thompson
Thompson
1948 - 1988
39
Edward William Hugh Taylor
Taylor
Unknown
Cookson
Living Robson
Gordon
2. Robson
Andrew Taylor
Lucy Taylor
1. Cookson
2. Cookson
1. Gordon
2. Gordon

1859
Peter
Robson