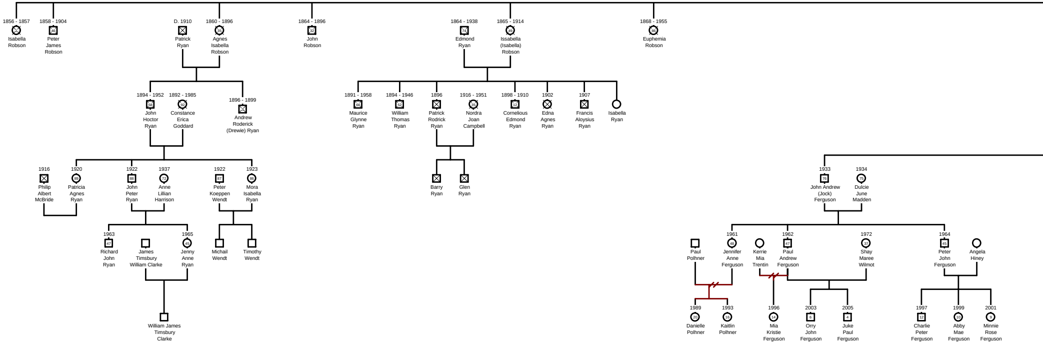
1856 - 1857 1 Isabella Robson
1858 - 1904 46 Peter James Robson
D. 1910 Patrick Ryan
1860 - 1896 35 Agnes Isabella Robson
1864 - 1896 32 John Robson
1864 - 1938 74 Edmond Ryan
1865 - 1914 49 Issabella (Isabella) Robson
1868 - 1955 86 Euphemia Robson
1894 - 1952 58 John Hoctor Ryan
1892 - 1985 92 Constance Erica Goddard
1896 - 1899 3 Andrew Roderick (Drewie) Ryan
1891 - 1958 66 Maurice Glynne Ryan
1894 - 1946 52 William Thomas Ryan
1896 Patrick Rodrick Ryan
1916 - 1951 35 Nordra Joan Campbell
1898 - 1910 12 Cornelious Edmond Ryan
1902 Edna Agnes Ryan
1907 Francis Aloysius Ryan
Isabella Ryan
1916 Philip Albert McBride
1920 89 Patricia Agnes Ryan
1922 88 John Peter Ryan
1937 72 Anne Lillian Harrison
1922 87 Peter Koeppen Wendt
1923 86 Mora Isabella Ryan
Barry Ryan
Glen Ryan
1933 76 John Andrew (Jock) Ferguson
1934 75 Dulcie June Madden
1963 47 Richard John Ryan
James Timsbury William Clarke
1965 45 Jenny Anne Ryan
Michail Wendt
Timothy Wendt
Paul Polhner
1961 48 Jennifer Anne Ferguson
Kerrie Mia Trentin
1962 47 Paul Andrew Ferguson
1972 37 Shay Maree Wilmot
1964 45 Peter John Ferguson
Angela Hiney
William James Timsbury Clarke
1989 20 Danielle Polhner
1993 16 Kaitlin Polhner
1996 14 Mia Kristie Ferguson
2003 6 Orry John Ferguson
2005 4 Juke Paul Ferguson
1997 12 Charlie Peter Ferguson
1999 10 Abby Mae Ferguson
2001 9 Minnie Rose Ferguson

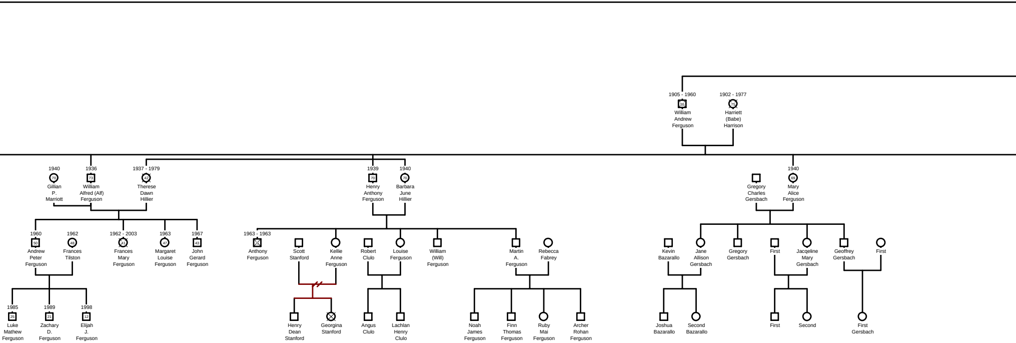
1905 - 1960
55
William Andrew Ferguson
1902 - 1977
75
Harriett (Babe) Harrison
1940
70
Gillian P. Marriott
1936
73
William Alfred (Alf) Ferguson
1937 - 1979
42
Therese Dawn Hillier
1939
70
Henry Anthony Ferguson
1940
70
Barbara June Hillier
Gregory Charles Gersbach
1940
69
Mary Alice Ferguson
1960
50
Andrew Peter Ferguson
1962
48
Frances Tilston
1962 - 2003
41
Frances Mary Ferguson
1963
47
Margaret Louise Ferguson
1967
43
John Gerard Ferguson
1963 - 1963
0
Anthony Ferguson
Scott Stanford
Kellie Anne Ferguson
Robert Clulo
Louise Ferguson
William (Will) Ferguson
Martin A. Ferguson
Rebecca Fabrey
Kevin Bazarallo
Jane Allison Gersbach
Gregory Gersbach
First
Jacqeline Mary Gersbach
Geoffrey Gersbach
First
1985
25
Luke Mathew Ferguson
1989
21
Zachary D. Ferguson
1998
12
Elijah J. Ferguson
Henry Dean Stanford
Georgina Stanford
Angus Clulo
Lachlan Henry Clulo
Noah James Ferguson
Finn Thomas Ferguson
Ruby Mai Ferguson
Archer Rohan Ferguson
Joshua Bazarallo
Second Bazarallo
First
Second
First Gersbach

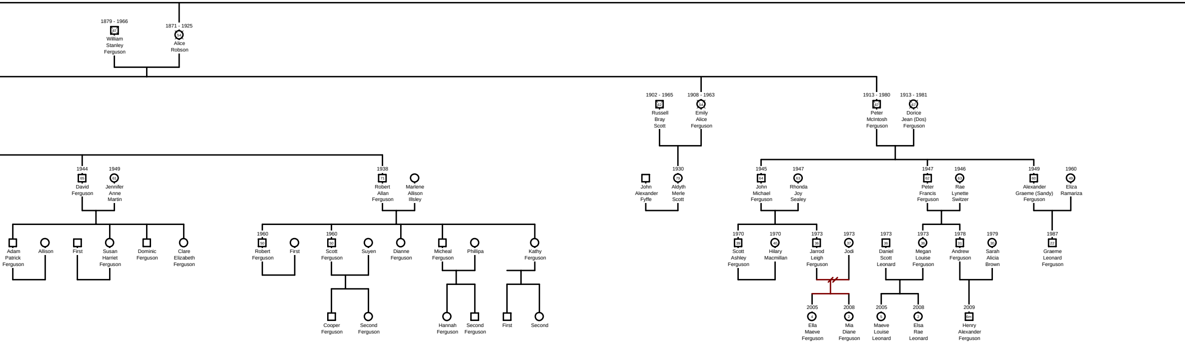
1879 - 1966
87
William Stanley Ferguson
1871 - 1925
54
Alice Robson
1902 - 1965
62
Russell Bray Scott
1908 - 1963
54
Emily Alice Ferguson
1913 - 1980
67
Peter McIntosh Ferguson
1913 - 1981
67
Dorice Jean (Dos) Ferguson
1944
65
David Ferguson
1949
61
Jennifer Anne Martin
1938
71
Robert Allan Ferguson
Marlene Allison Illsley
John Alexander Fyffe
1930
79
Aldyth Merle Scott
1945
64
John Michael Ferguson
1947
63
Rhonda Joy Sealey
1947
62
Peter Francis Ferguson
1946
63
Rae Lynette Switzer
1949
60
Alexander Graeme (Sandy) Ferguson
1960
49
Eliza Ramariza
Adam Patrick Ferguson
Allison
First
Susan Harriet Ferguson
Dominic Ferguson
Clare Elizabeth Ferguson
1960
50
Robert Ferguson
First
1960
50
Scott Ferguson
Suyen
Dianne Ferguson
Micheal Ferguson
Phillipa
Kathy Ferguson
1970
39
Scott Ashley Ferguson
1970
40
Hilary Macmillan
1973
36
Jarrod Leigh Ferguson
1973
37
Jodi
1973
36
Daniel Scott Leonard
1973
36
Megan Louise Ferguson
1978
31
Andrew Ferguson
1979
30
Sarah Alicia Brown
1987
22
Graeme Leonard Ferguson
Cooper Ferguson
Second Ferguson
Hannah Ferguson
Second Ferguson
First
Second
2005
4
Ella Maeve Ferguson
2008
2
Mia Diane Ferguson
2005
5
Maeve Louise Leonard
2008
2
Elsa Rae Leonard
2009
6m
Henry Alexander Ferguson

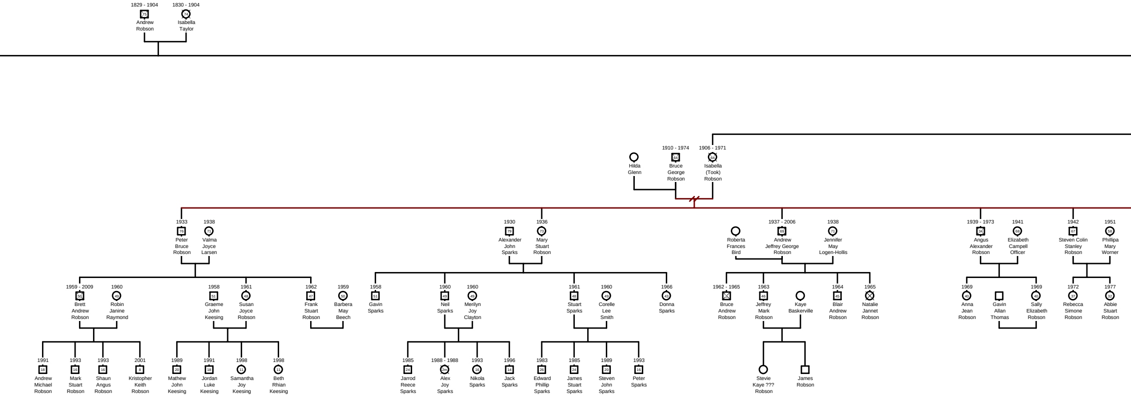

1829 - 1904
75
Andrew Robson
1830 - 1904
74
Isabella Taylor
Hilda Glenn
1910 - 1974
64
Bruce George Robson
1906 - 1971
64
Isabella (Took) Robson
1933
76
Peter Bruce Robson
1938
71
Valma Joyce Larsen
1930
79
Alexander John Sparks
1936
73
Mary Stuart Robson
Roberta Frances Bird
1937 - 2006
69
Andrew Jeffrey George Robson
1938
71
Jennifer May Logen-Hollis
1939 - 1973
34
Angus Alexander Robson
1941
68
Elizabeth Campell Officer
1942
67
Steven Colin Stanley Robson
1951
58
Phillipa Mary Worner
1959 - 2009
50
Brett Andrew Robson
1960
49
Robin Janine Raymond
1958
51
Graeme John Keesing
1961
48
Susan Joyce Robson
1962
47
Frank Stuart Robson
1959
50
Barbera May Beech
1958
51
Gavin Sparks
1960
49
Neil Sparks
1960
49
Merilyn Joy Clayton
1961
48
Stuart Sparks
1960
49
Corelle Lee Smith
1966
43
Donna Sparks
1962 - 1965
Bruce Andrew Robson
1963
46
Jeffrey Mark Robson
Kaye Baskerville
1964
45
Blair Andrew Robson
1965
Natalie Jannet Robson
1969
40
Anna Jean Robson
Gavin Allan Thomas
1969
40
Sally Elizabeth Robson
1972
37
Rebecca Simone Robson
1977
32
Abbie Stuart Robson
1991
18
Andrew Michael Robson
1993
16
Mark Stuart Robson
1993
16
Shaun Angus Robson
2001
8
Kristopher Keith Robson
1989
20
Mathew John Keesing
1991
18
Jordan Luke Keesing
1998
11
Samantha Joy Keesing
1998
11
Beth Rhian Keesing
1985
24
Jarrod Reece Sparks
1988 - 1988
2m
Alex Joy Sparks
1993
16
Nikola Sparks
1996
14
Jack Sparks
1983
26
Edward Phillip Sparks
1985
24
James Stuart Sparks
1989
20
Steven John Sparks
1993
16
Peter Sparks
Stevie Kaye ??? Robson
James Robson

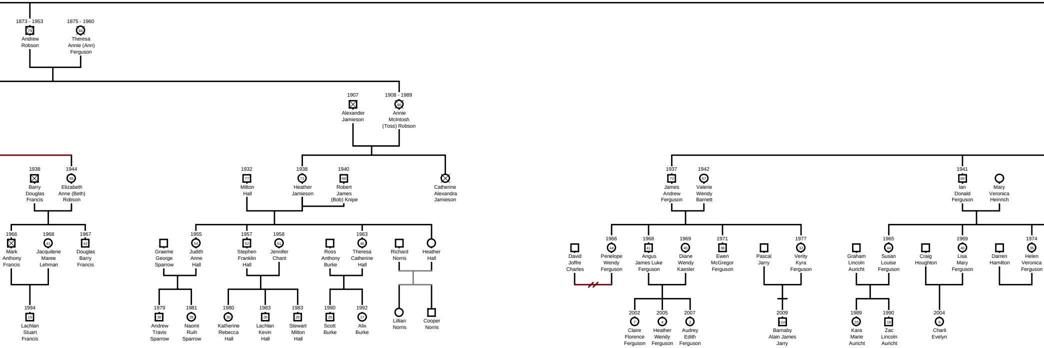
1873 - 1953
79
Andrew Robson
1875 - 1960
84
Theresa Annie (Ann) Ferguson
1907
Alexander Jamieson
1908 - 1989
80
Annie McIntosh (Toss) Robson
1938
Barry Douglas Francis
1944
65
Elizabeth Anne (Beth) Robson
1932
77
Milton Hall
1938
71
Heather Jamieson
1940
69
Robert James (Bob) Knipe
Catherine Alexandra Jamieson
1966
Mark Anthony Francis
1968
41
Jacquilene Maree Lehman
1967
42
Douglas Barry Francis
Graeme George Sparrow
1955
54
Judith Anne Hall
1957
52
Stephen Franklin Hall
1958
51
Jennifer Chant
Ross Anthony Burke
1963
46
Theresa Catherine Hall
Richard Norris
Heather Hall
1994
15
Lachlan Stuart Francis
1979
30
Andrew Travis Sparrow
1981
28
Naomi Ruih Sparrow
1980
30
Katherine Rebecca Hall
1983
26
Lachlan Kevin Hall
1983
26
Stewart Milton Hall
1990
20
Scott Burke
1992
17
Alix Burke
Lillian Norris
Cooper Norris
1937
72
James Andrew Ferguson
1942
67
Valerie Wendy Barnett
1941
69
Ian Donald Ferguson
Mary Veronica Heinrich
David Joffre Charles
1966
44
Penelope Wendy Ferguson
1968
41
Angus James Luke Ferguson
1969
40
Diane Wendy Kaesler
1971
38
Ewen McGregor Ferguson
Pascal Jarry
1977
32
Verity Kyra Ferguson
Graham Lincoln Auricht
1965
44
Susan Louise Ferguson
Craig Houghton
1969
40
Lisa Mary Ferguson
Darren Hamilton
1974
35
Helen Veronica Ferguson
2002
7
Claire Florence Ferguson
2005
4
Heather Wendy Ferguson
2007
2
Audrey Edith Ferguson
2009
11m
Barnaby Alain James Jarry
1989
20
Kara Marie Auricht
1990
19
Zac Lincoln Auricht
2004
6
Charli Evelyn

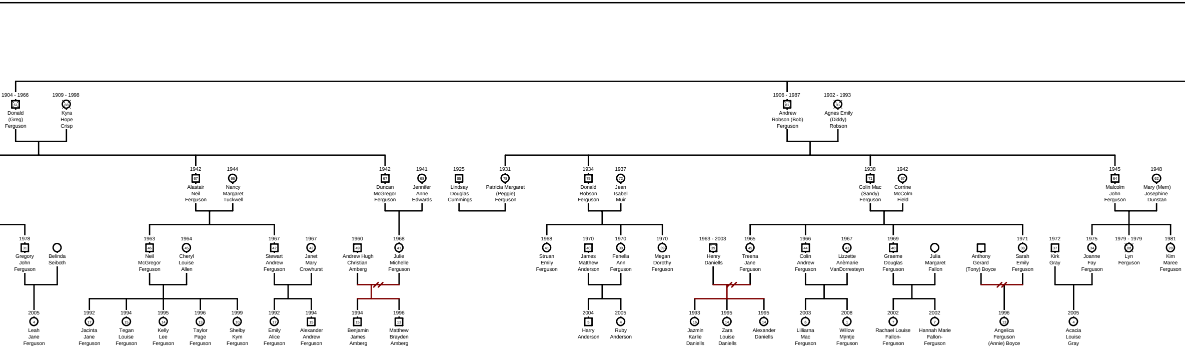
1904 - 1966
61
Donald (Greg) Ferguson
1909 - 1998
88
Kyra Hope Crisp
1906 - 1987
81
Andrew Robson (Bob) Ferguson
1902 - 1993
91
Agnes Emily (Diddy) Robson
1942
67
Alastair Neil Ferguson
1944
66
Nancy Margaret Tuckwell
1942
67
Duncan McGregor Ferguson
1941
68
Jennifer Anne Edwards
1925
85
Lindsay Douglas Cummings
1931
78
Patricia Margaret (Peggie) Ferguson
1934
75
Donald Robson Ferguson
1937
72
Jean Isabel Muir
1938
71
Colin Mac (Sandy) Ferguson
1942
67
Corrine McColm Field
1945
64
Malcolm John Ferguson
1948
62
Mary (Mem) Josephine Dunstan
1978
31
Gregory John Ferguson
Belinda Seiboth
1963
46
Neil McGregor Ferguson
1964
45
Cheryl Louise Allen
1967
42
Stewart Andrew Ferguson
1967
42
Janet Mary Crowhurst
1960
49
Andrew Hugh Christian Amberg
1968
41
Julie Michelle Ferguson
1968
41
Struan Emily Ferguson
1970
40
James Matthew Anderson
1970
39
Fenella Ann Ferguson
1970
39
Megan Dorothy Ferguson
1963 - 2003
39
Henry Daniells
1965
45
Treena Jane Ferguson
1966
44
Colin Andrew Ferguson
1967
43
Lizzette Anèmarie VanDorresteyn
1969
40
Graeme Douglas Ferguson
Julia Margaret Fallon
Anthony Gerard (Tony) Boyce
1971
38
Sarah Emily Ferguson
1972
37
Kirk Gray
1975
34
Joanne Fay Ferguson
1979 - 1979
0d
Lyn Ferguson
1981
28
Kim Maree Ferguson
2005
4
Leah Jane Ferguson
1992
17
Jacinta Jane Ferguson
1994
15
Tegan Louise Ferguson
1995
14
Kelly Lee Ferguson
1996
13
Taylor Page Ferguson
1999
10
Shelby Kym Ferguson
1992
17
Emily Alice Ferguson
1994
15
Alexander Andrew Ferguson
1994
15
Benjamin James Amberg
1996
13
Matthew Brayden Amberg
2004
5
Harry Anderson
2005
4
Ruby Anderson
1993
16
Jazmin Karlie Daniells
1995
14
Zara Louise Daniells
1995
14
Alexander Daniells
2003
6
Lilliarna Mac Ferguson
2008
1
Willow Mÿntje Ferguson
2002
7
Rachael Louise Fallon-Ferguson
2002
7
Hannah Marie Fallon-Ferguson
1996
13
Angelica Ferguson (Annie) Boyce
2005
4
Acacia Louise Gray

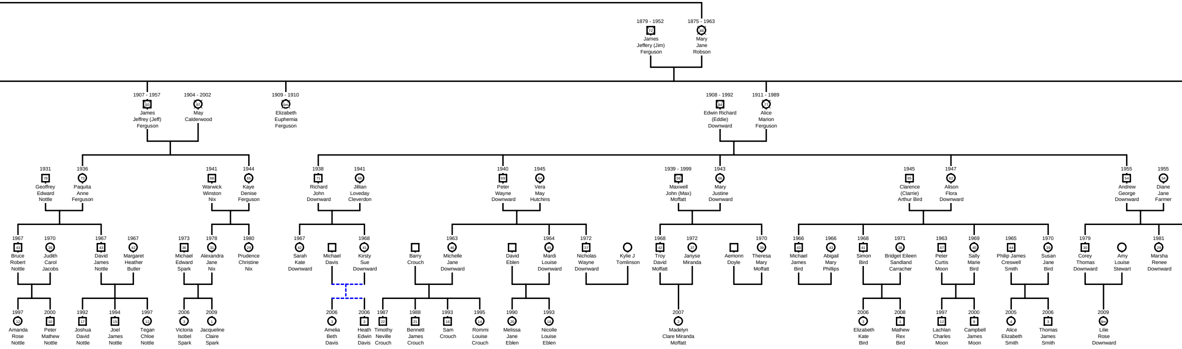
1879 - 1952 72 James Jeffery (Jim) Ferguson
1875 - 1963 88 Mary Jane Robson
1907 - 1957 50 James Jeffrey (Jeff) Ferguson
1904 - 2002 97 May Calderwood
1909 - 1910 5m Elizabeth Euphemia Ferguson
1908 - 1992 84 Edwin Richard (Eddie) Downward
1911 - 1989 77 Alice Marion Ferguson
1931 78 Geoffrey Edward Nottle
1936 73 Paquita Anne Ferguson
1941 68 Warwick Winston Nix
1944 65 Kaye Denise Ferguson
1938 71 Richard John Downward
1941 68 Jillian Loveday Cleverdon
1940 69 Peter Wayne Downward
1945 64 Vera May Hutchins
1939 - 1999 59 Maxwell John (Max) Moffatt
1943 66 Mary Justine Downward
1945 65 Clarence (Clarrie) Arthur Bird
1947 62 Alison Flora Downward
1955 54 Andrew George Downward
1955 54 Diane Jane Farmer
1967 43 Bruce Robert Nottle
1970 39 Judith Carol Jacobs
1967 43 David James Nottle
1967 42 Margaret Heather Butler
1973 36 Michael Edward Spark
1978 31 Alexandra Jane Nix
1980 29 Prudence Christine Nix
1967 42 Sarah Kate Downward
Michael Davis
1968 41 Kirsty Sue Downward
Barry Crouch
1963 46 Michelle Jane Downward
David Eblen
1964 45 Mardi Louise Downward
1972 37 Nicholas Wayne Downward
Kylie J Tomlinson
1968 42 Troy David Moffatt
1972 37 Janyse Miranda
Aemonn Doyle
1970 39 Theresa Mary Moffatt
1966 43 Michael James Bird
1966 43 Abigail Mary Phillips
1968 41 Simon Bird
1971 38 Bridget Eileen Sandland Carracher
1963 47 Peter Curtis Moon
1969 40 Sally Marie Bird
1965 44 Philip James Creswell Smith
1970 39 Susan Jane Bird
1979 30 Corey Thomas Downward
Amy Louise Stewart
1981 29 Marsha Renee Downward
1997 12 Amanda Rose Nottle
2000 10 Peter Mathew Nottle
1992 17 Joshua David Nottle
1994 15 Joel James Nottle
1997 12 Tegan Chloe Nottle
2006 3 Victoria Isobel Spark
2009 1 Jacqueline Claire Spark
2006 3 Amelia Beth Davis
2006 3 Heath Edwin Davis
1987 22 Timothy Neville Crouch
1988 21 Bennett James Crouch
1993 16 Sam Crouch
1995 14 Rommi Louise Crouch
1990 20 Melissa Jane Eblen
1993 16 Nicolle Louise Eblen
2007 2 Madelyn Clare Miranda Moffatt
2006 3 Elizabeth Kate Bird
2008 1 Mathew Rex Bird
1997 12 Lachlan Charles Moon
2000 9 Campbell James Moon
2005 4 Alice Elizabeth Smith
2006 3 Thomas James Smith
2009 9m Lilie Rose Downward

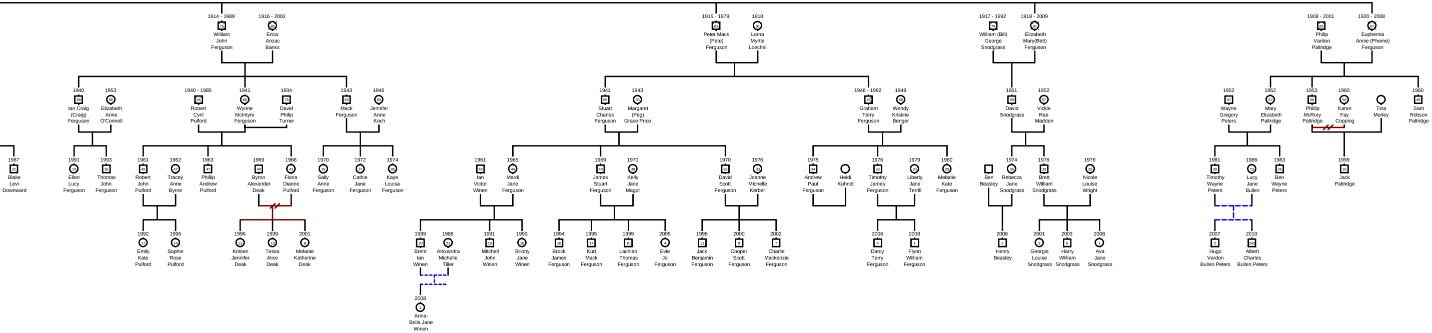
1914 - 1989 75 William John Ferguson
1916 - 2002 85 Erica Anzac Banks
1915 - 1979 63 Peter Mack (Pete) Ferguson
1918 91 Lorna Myrtle Loechel
1917 - 1992 74 William (Bill) George Snodgrass
1918 - 2009 91 Elizabeth Mary(Bett) Ferguson
1908 - 2001 93 Philip Vardon Paltridge
1920 - 2008 87 Euphemia Annie (Pheme) Ferguson
1940 69 Ian Craig (Craig) Ferguson
1953 56 Elizabeth Anne O'Connell
1940 - 1985 45 Robert Cyril Pulford
1941 68 Wynne McIntyre Ferguson
1934 75 David Philip Turner
1943 66 Mack Ferguson
1946 63 Jennifer Anne Koch
1941 69 Stuart Charles Ferguson
1943 66 Margaret (Peg) Grace Price
1946 - 1992 45 Graham Terry Ferguson
1949 60 Wendy Kristine Benger
1951 59 David Snodgrass
1952 57 Vickie Rae Madden
1952 57 Wayne Gregory Peters
1952 57 Mary Elizabeth Paltridge
1953 56 Phillip McRory Paltridge
1960 50 Karen Fay Copping
Tina Morley
1960 49 Sam Robson Paltridge
1987 22 Blake Levi Downward
1991 19 Ellen Lucy Ferguson
1993 16 Thomas John Ferguson
1961 48 Robert John Pulford
1962 47 Tracey Anne Byrne
1963 47 Phillip Andrew Pulford
1969 40 Byron Alexander Deak
1968 41 Fiona Dianne Pulford
1970 39 Sally Anne Ferguson
1972 37 Cathie Jane Ferguson
1974 35 Kaye Louisa Ferguson
1961 48 Ian Victor Winen
1965 44 Mardi Jane Ferguson
1969 40 James Stuart Ferguson
1970 39 Kelly Jane Magor
1970 39 David Scott Ferguson
1976 33 Joanne Michelle Kerber
1975 34 Andrew Paul Ferguson
Heidi Kuhndt
1976 33 Timothy James Ferguson
1979 30 Liberty Jane Terrill
1980 29 Melanie Kate Ferguson
Ben Beasley
1974 35 Rebecca Jane Snodgrass
1976 33 Brett William Snodgrass
1976 33 Nicole Louise Wright
1981 28 Timothy Wayne Peters
1986 23 Lucy Jane Bullen
1983 26 Ben Wayne Peters
1999 10 Jack Paltridge
1992 17 Emily Kate Pulford
1996 14 Sophie Rose Pulford
1996 13 Kristen Jennifer Deak
1999 10 Tessa Alice Deak
2001 8 Melanie Katherine Deak
1989 20 Brent Ian Winen
1988 21 Alexandra Michelle Tiller
1991 19 Mitchell John Winen
1993 16 Briony Jane Winen
1994 16 Brock James Ferguson
1995 14 Kurt Mack Ferguson
1999 10 Lachlan Thomas Ferguson
2005 4 Evie Jo Ferguson
1998 11 Jack Benjamin Ferguson
2000 9 Cooper Scott Ferguson
2002 7 Charlie Mackenzie Ferguson
2006 4 Darcy Terry Ferguson
2008 1 Flynn William Ferguson
2008 2 Henry Beasley
2001 9 Georgie Louise Snodgrass
2003 6 Harry William Snodgrass
2008 1 Ava Jane Snodgrass
2007 2 Hugo Vardon Bullen Peters
2010 24d Albert Charles Bullen Peters
2008 1 Anna-Bella Jane Winen